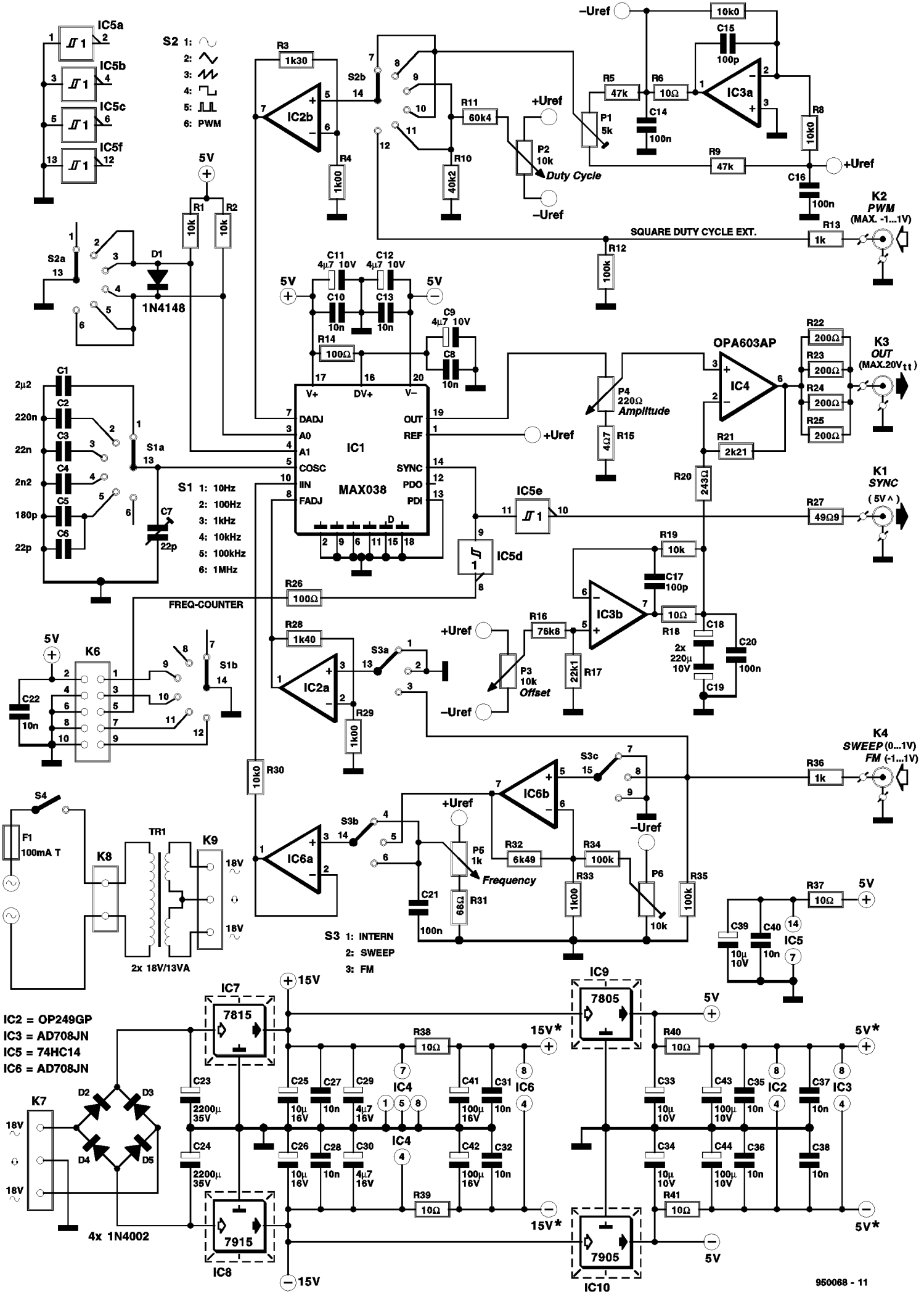

IC5a
IC5b
IC5c
IC5f
S2 1: 2: 3: 4: 5: 6: PWM
R3 1k30
IC2b
S2b
R4 1k00
R11 60k4
R10 40k2
+Uref
P2 10k Duty Cycle
–Uref
R7 10k0
C15 100p
R5 47k
R6 10Ω
IC3a
P1 5k
C14 100n
R8 10k0
R9 47k
C16 100n
K2 PWM (MAX. -1...1V)
SQUARE DUTY CYCLE EXT.
R13 1k
R12 100k
5V
R1 10k
R2 10k
S2a
D1 1N4148
C11 4µ7 10V
C12 4µ7 10V
C10 10n
C13 10n
C9 4µ7 10V
C8 10n
R14 100Ω
IC1 MAX038
V+ DV+ V–
DADJ A0 A1 COSC IIN FADJ
OUT REF SYNC PDO PDI
OPA603AP
IC4
P4 220Ω Amplitude
R15 4Ω7
R22 200Ω
R23 200Ω
R24 200Ω
R25 200Ω
K3 OUT (MAX.20Vtt)
R21 2k21
R20 243Ω
K1 SYNC (5V^)
R27 49Ω9
IC5e
IC5d
C1 2µ2
C2 220n
C3 22n
C4 2n2
C5 180p
C6 22p
S1a
C7 22p
S1 1: 10Hz 2: 100Hz 3: 1kHz 4: 10kHz 5: 100kHz 6: 1MHz
R26 100Ω
FREQ-COUNTER
R19 10k
C17 100p
IC3b
R18 10Ω
C18 2x 220µ 10V
C19
C20 100n
R16 76k8
R17 22k1
P3 10k Offset
R28 1k40
IC2a
S3a
R29 1k00
K6
C22 10n
S1b
R30 10k0
K4 SWEEP (0...1V) FM (-1...1V)
R36 1k
S3c
IC6b
IC6a
S3b
P5 1k Frequency
R32 6k49
R34 100k
R33 1k00
P6 10k
R35 100k
C21 100n
R31 68Ω
S3 1: INTERN 2: SWEEP 3: FM
S4
F1 100mA T
K8
TR1
K9
18V
2x 18V/13VA
R37 10Ω
C39 10µ 10V
C40 10n
IC5
IC2 = OP249GP
IC3 = AD708JN
IC5 = 74HC14
IC6 = AD708JN
IC7 7815
IC8 7915
IC9 7805
IC10 7905
15V
15V*
5V*
K7
D2 D3 D4 D5
4x 1N4002
C23 2200µ 35V
C24 2200µ 35V
C25 10µ 16V
C26 10µ 16V
C27 10n
C28 10n
C29 4µ7 16V
C30 4µ7 16V
R38 10Ω
R39 10Ω
C41 100µ 16V
C42 100µ 16V
C31 10n
C32 10n
IC4
IC6
C33 10µ 10V
C34 10µ 10V
C43 100µ 10V
C44 100µ 10V
C35 10n
C36 10n
C37 10n
C38 10n
R40 10Ω
R41 10Ω
IC2
IC3
950068 - 11