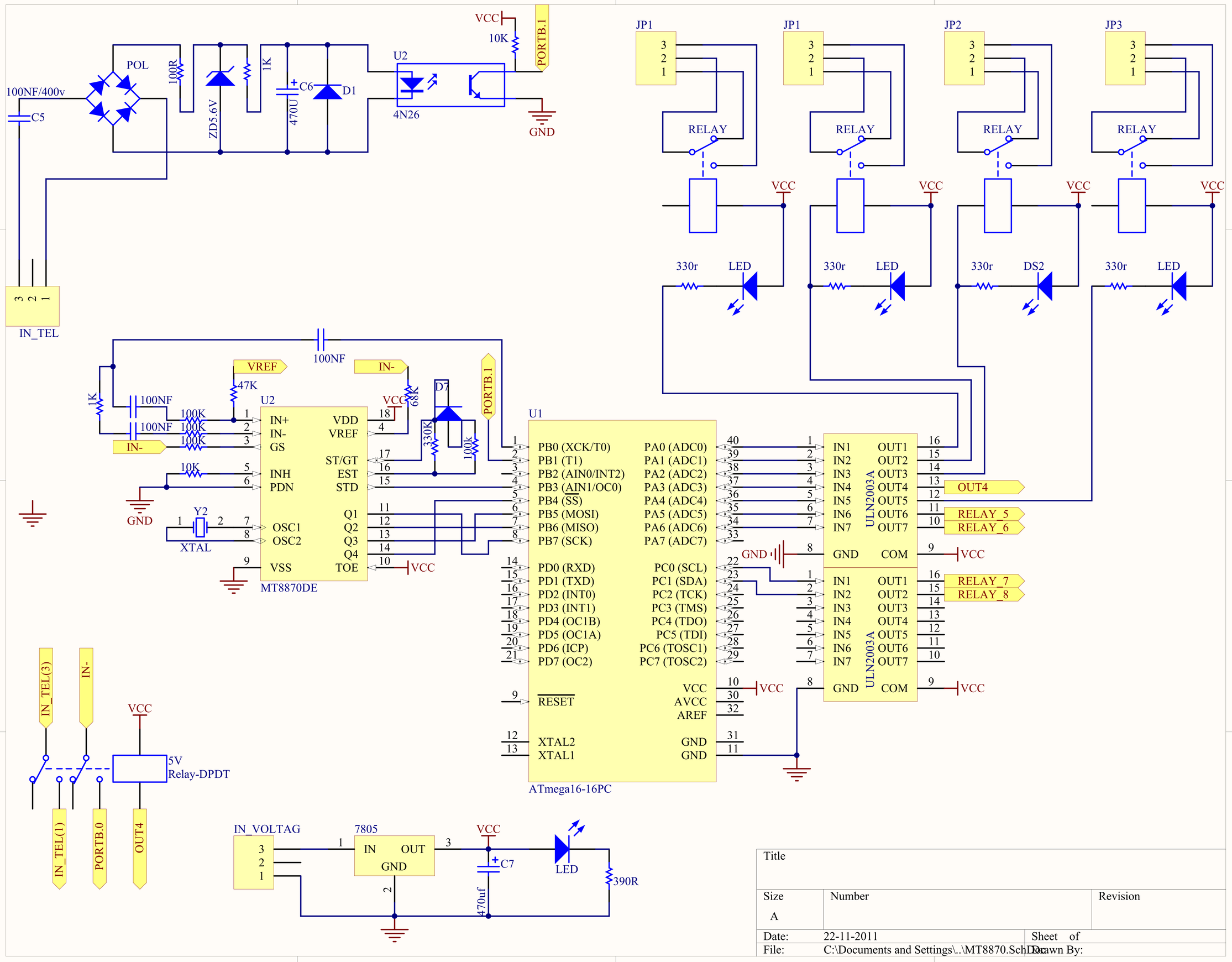

Title		
Size A	Number	Revision
Date: 22-11-2011	Sheet of	
File: C:\Documents and Settings\..\MT8870.SchDoc	Drawn By:	