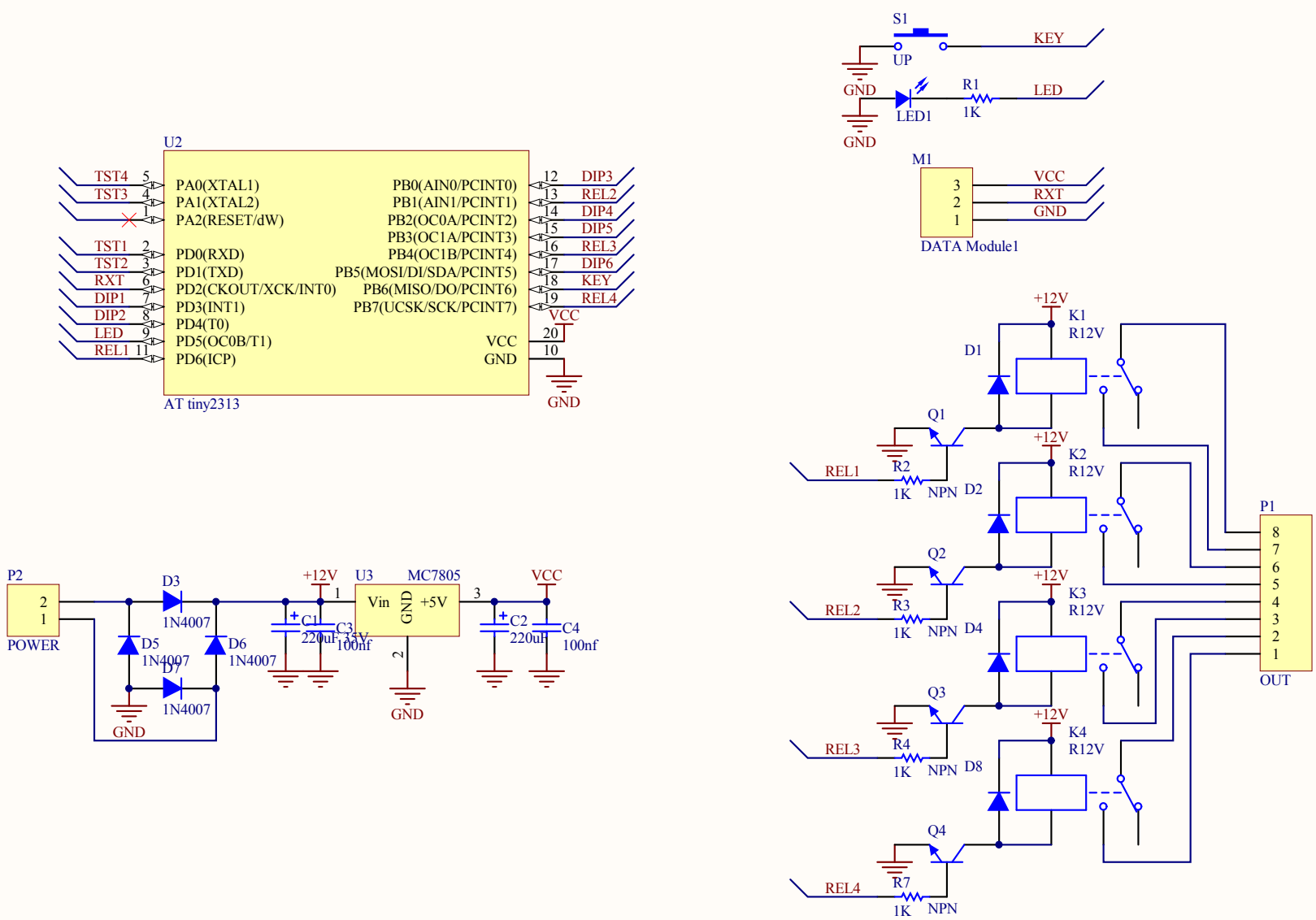

Title		
REMOUT T2313 BY Hadi Asadi		
Size A	Number	Revision
Date: 6/20/2011	Sheet of	
File: D:\PROJECT\REMOTE\REMOUT T13.SchDoc	Drawn By:	